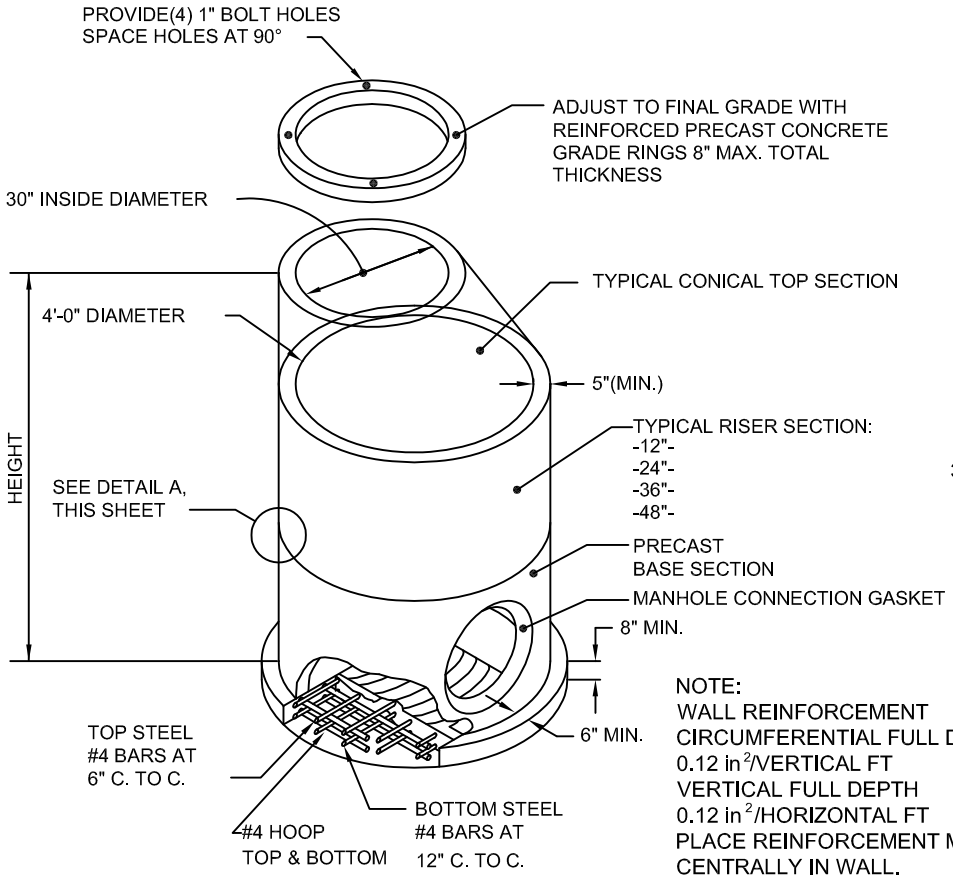

NOTE:
WALL REINFORCEMENT
CIRCUMFERENTIAL FULL DEPTH
0.12 in²/VERTICAL FT
VERTICAL FULL DEPTH
0.12 in²/HORIZONTAL FT
PLACE REINFORCEMENT MESH
CENTRALLY IN WALL.

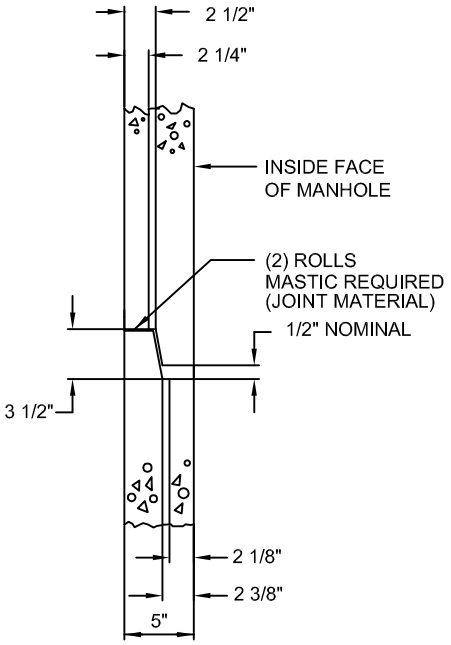

DETAIL A

NOTES

1) CONSTRUCT IN ACCORDANCE WITH PENNDOT PUBLICATION 408 CURRENT EDITION SECTION 714 AND ASTM C-478M-90. STANDARD SPECIFICATION FOR PRECAST REINFORCED CONCRETE MANHOLE SECTIONS AND PENNDOT RC STANDARDS CURRENT EDITION AND AS MODIFIED HEREIN.
2) DESIGN FOR HS-25 LIVE LOADING.
3) MINIMUM CONCRETE COMPRESSIVE STRENGTH:
   CAST IN PLACE 4000 PSI
   PRECAST 4000 PSI
4) PROVIDE STEEL REINFORCEMENT IN ACCORDANCE WITH ASTM A185, STEEL WELDED WIRE FABRIC ASTM A663/A663M & A675/A675M, PLAIN BILLET STEEL BARS OR ASTM A615/A615M, DEFORMED BILLET STEEL BARS. PROVIDE MINIMUM YIELD STRENGTH OF 400 MPa (60,000 PSI).
5) CLEAR COVER FOR STEEL:

WALLS:	CAST-IN-PLACE	50 (2")	
	PRECAST	40 (1 1/2")	
FOOTINGS:	CAST-IN-PLACE	60 (2 1/2")	TOP BARS
		80 (3")	BOTTOM BARS
		50 (2")	SIDE COVER
	PRECAST	50 (2")	TOP BARS
		40 (1 1/2")	BOTTOM BARS
		40 (1 1/2")	SIDE COVER
SLABS:	CAST-IN-PLACE	50 (2")	TOP & BOTTOM BARS

6) MANHOLE COATINGS: EXTERIOR COATING; COOPER BLACK NO. 760 TOP SERVICE BLACK AS MANUFACTURED BY COOPERS CREEK CHEMICAL CORP. OR APPROVED EQUAL AT LEAST THREE (3) COATS SHALL BE APPLIED GIVING A TOTAL DRY FILM THICKNESS OF A MINIMUM 32.0 MILS. INTERIOR COATING: SHERWIN-WILLIAMS MACROPOXY 646 NSF, MILL WHITE MANHOLE COATING OR APPROVED EQUAL. AT LEAST TWO (2) COATS SHALL BE APPLIED GIVING A TOTAL DRY FILM THICKNESS OF A MINIMUM 10-14 MILS.
7) FLOW CHANNEL TO BE PRECAST INTO MANHOLE BASE.
8) MANHOLE CONNECTION GASKETS: A-LOK AS MANUFACTURED BY A-LOK PRODUCTS, INC. (SPEC. ASTM C-923) OR APPROVED EQUAL.
9) MANHOLES THAT EXCEED 5 FEET IN DEPTH SHALL BE CONSTRUCTED WITH STEPS. REFER TO FRANCONIA TOWNSHIP DETAIL SN617 FOR SPEC. OF STEPS.

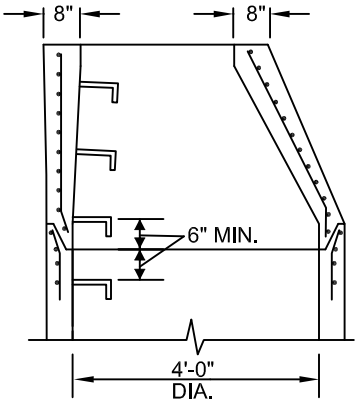

CONE SECTION

FRANCONIA TOWNSHIP STANDARD DETAIL

PRECAST SANITARY MANHOLE

Metz Engineers

DATE	7–2012	NOT TO SCALE	SN600