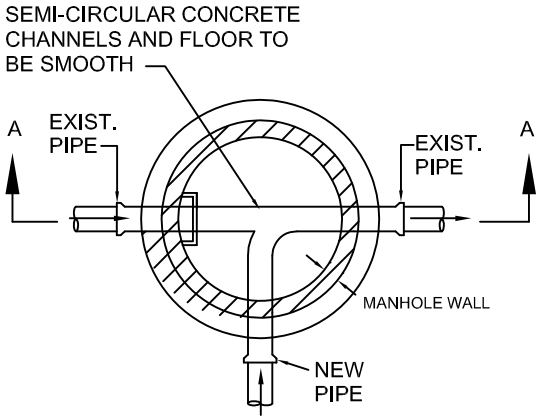

PLAN

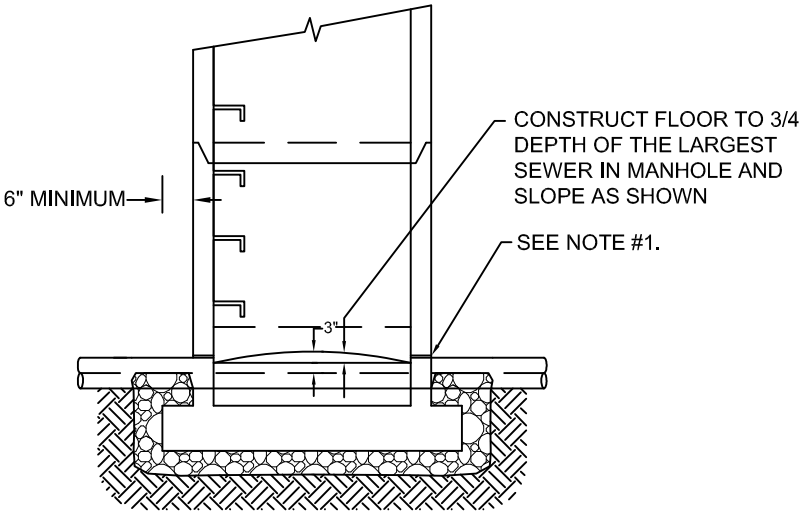

SECTION A-A

NOTES:
1) CORE DRILL HOLE INTO EXISTING MANHOLE WALL.
2) IF PVC OR D.I.P., INSTALL PSX: POSITIVE SEAL GASKET (PRESS-SEAL GASKET CORP.) OR APPROVED EQUAL.
3) RESHAPE AND OR RECONSTRUCT EXISTING CHANNEL FOR NEW FLOW PATTERN.

FRANCONIA TOWNSHIP STANDARD DETAIL

CONNECTION TO EXISTING MANHOLE

DATE	7–2012	NOT TO SCALE	SN606

Metz Engineers