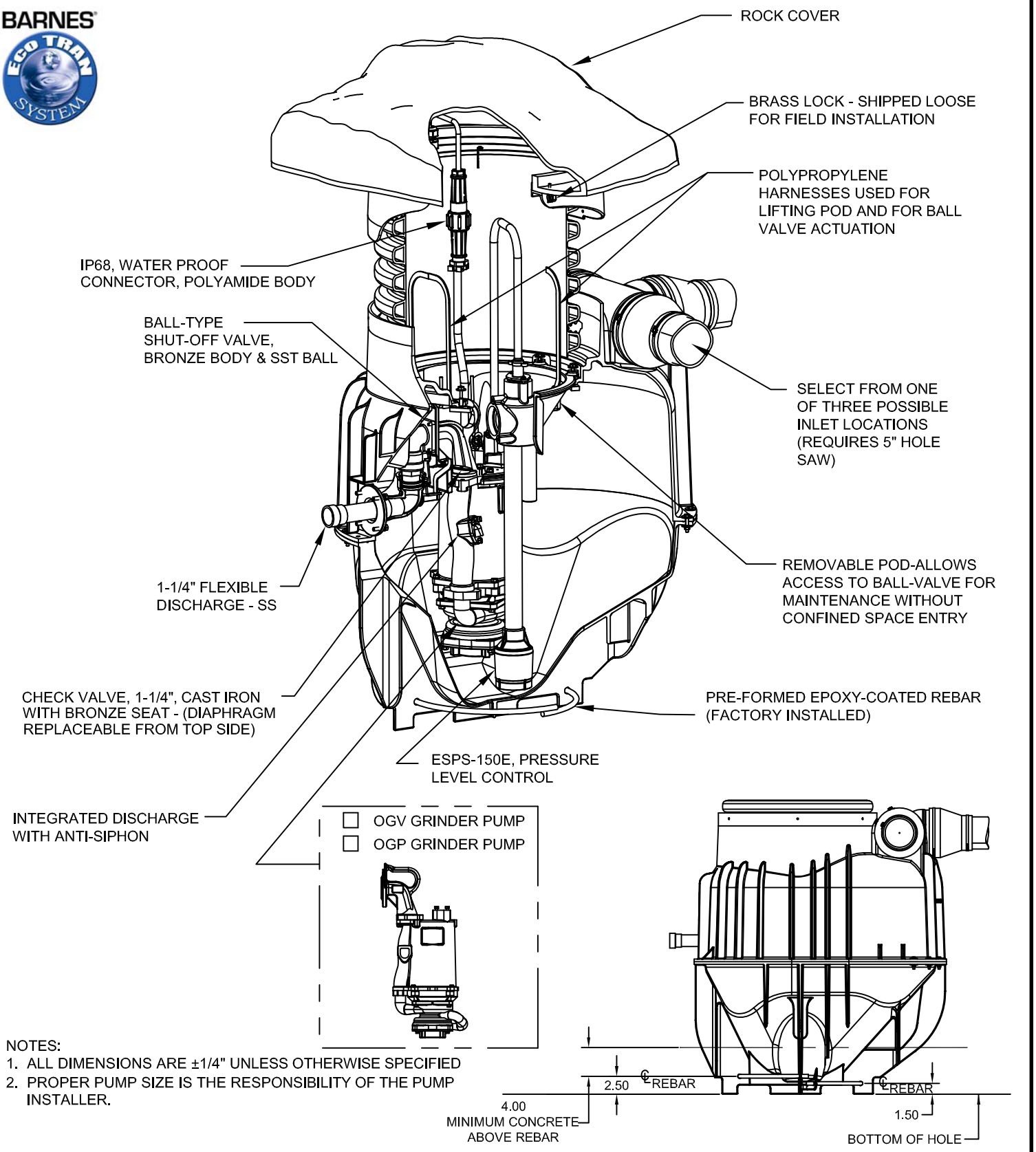

NOTES:
1. ALL DIMENSIONS ARE ±1/4" UNLESS OTHERWISE SPECIFIED
2. PROPER PUMP SIZE IS THE RESPONSIBILITY OF THE PUMP INSTALLER.

BASE SECTION CONCRETE ANCHOR REQUIRED

CRANE® PUMPS & SYSTEMS

BARNES® PRESSURE SYSTEMS

FRANCONIA TOWNSHIP STANDARD DETAIL

SIMPLEX, ECO TRAN SYSTEM, OGP GRINDER PUMP

Metz Engineers

DATE	7–2012	NOT TO SCALE	SN621