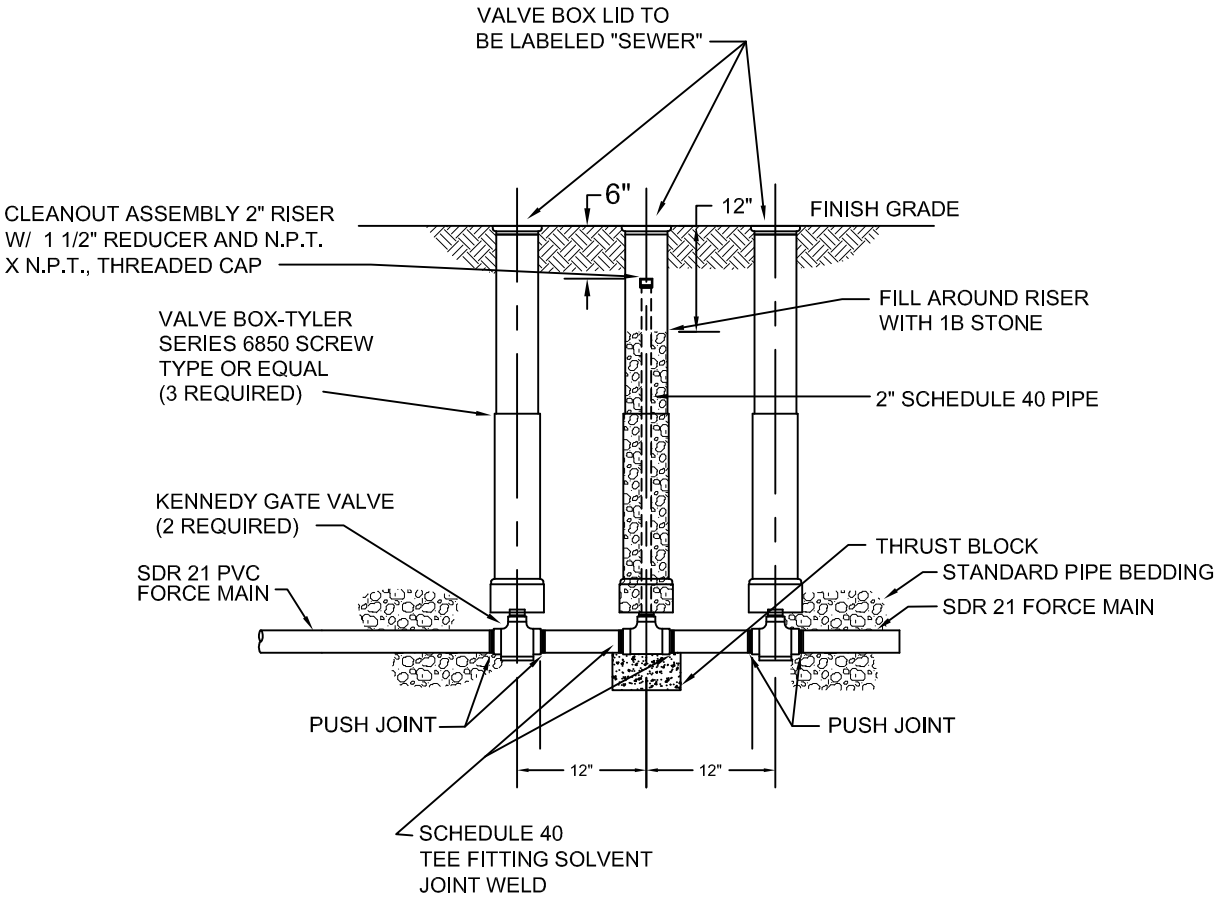

FRANCONIA TOWNSHIP STANDARD DETAIL

INLINE CLEANOUT DETAIL FOR PRESSURE SEWER

Metz Engineers

DATE	7–2012	NOT TO SCALE	SN624