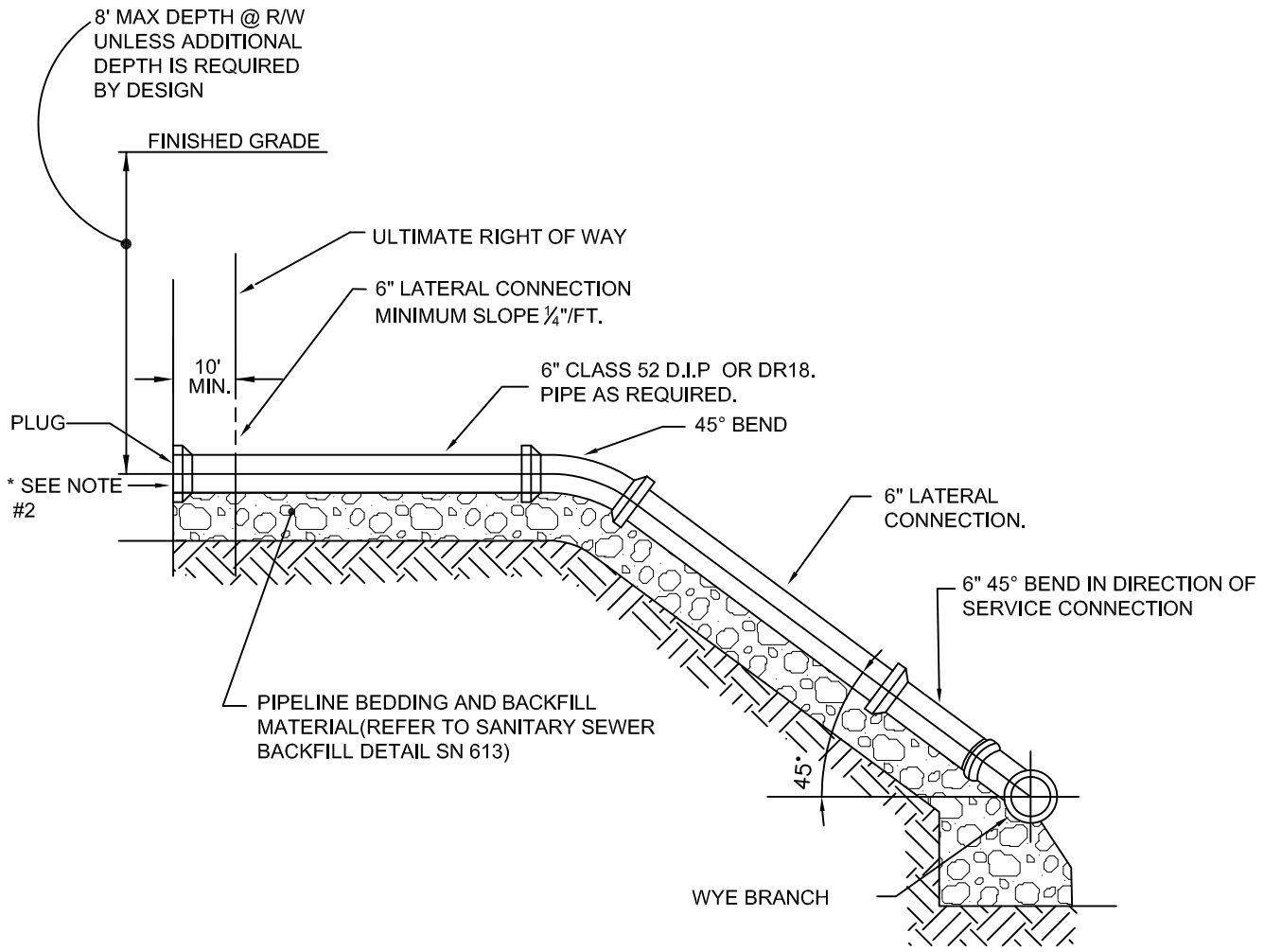

ELEVATION

NOTE:
1. 6" LATERAL TO BE EXTENDED 10 FT BEYOND ULT. R/W
2. SET 2"X 4" OAK STAKE TO EXTEND 48" ABOVE FINISHED GRADE. PAINT TOP OF STAKE GREEN, WITH LOT # WRITTEN ON STAKE.

FRANCONIA TOWNSHIP STANDARD DETAIL

DEEP CUT LATERAL CONNECTION

DATE	7–2012	NOT TO SCALE	SN616

Metz Engineers