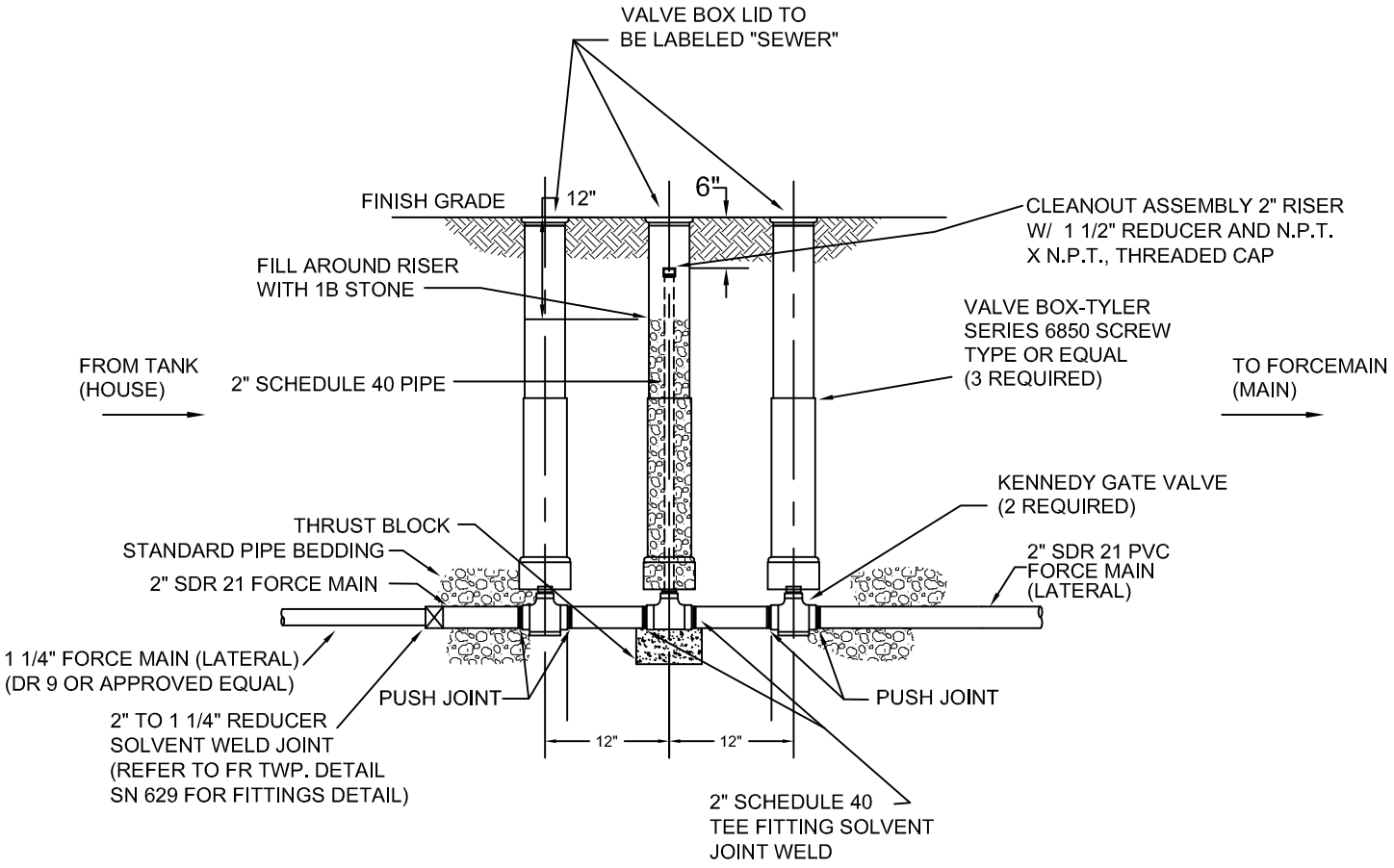

FRANCONIA TOWNSHIP STANDARD DETAIL

CLEANOUT DETAIL FOR PRESSURE LATERALS

Metz Engineers

DATE	7–2012	NOT TO SCALE	SN623