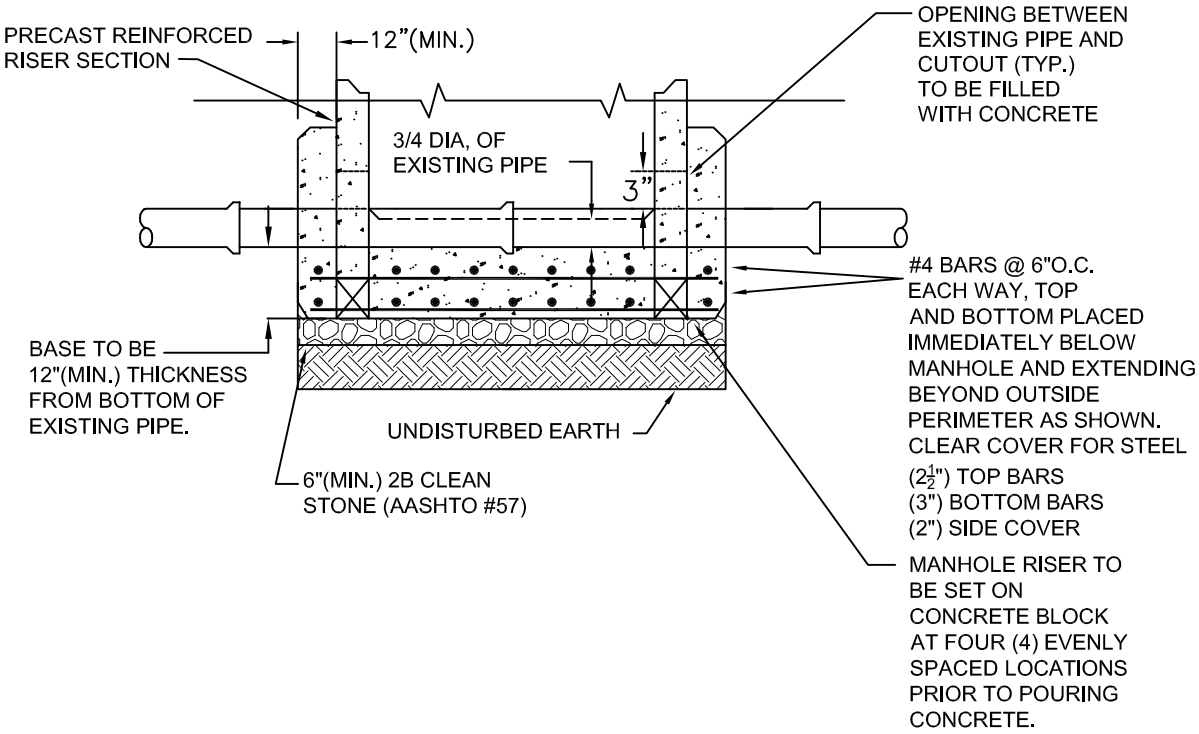

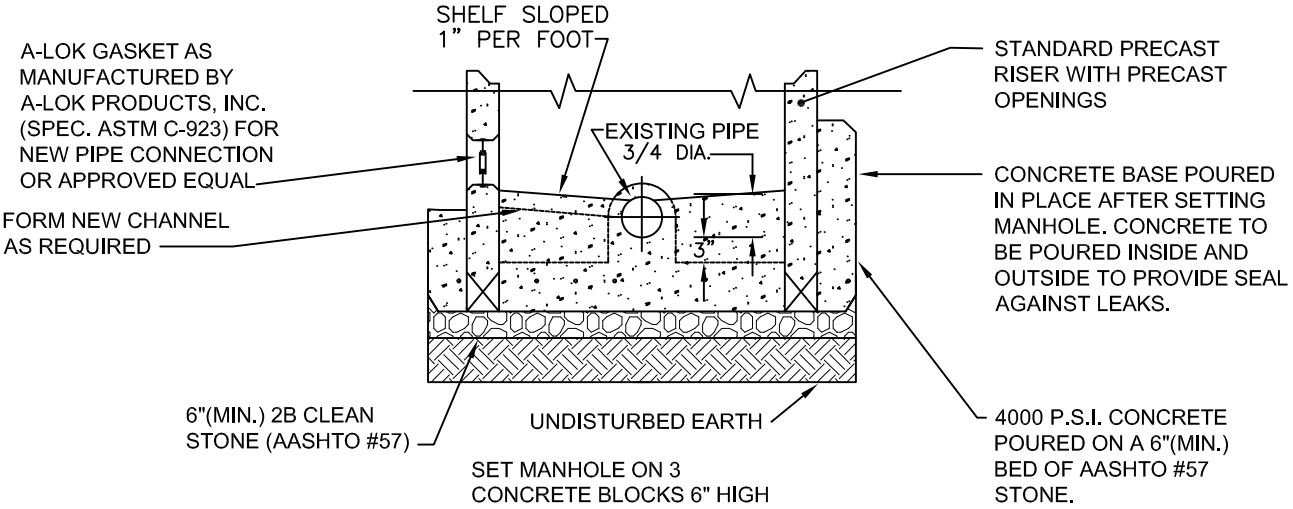

NOTE:

1. EXISTING PIPE TO REMAIN UNTIL SATISFACTORY COMPLETION OF MANHOLE TESTING
2. REMOVE CROWN OF EXISTING PIPE FLUSH WITH CONCRETE SHELF.
3. NEW CHANNEL MUST BE FORMED FOR NEW PIPE.
4. NEW PIPE CANNOT BE MADE ACTIVE UNTIL NEW CHANNEL IS FORMED AND EXISTING PIPE CROWN IS REMOVED.
5. COAT INTERIOR OF NEW BASE CHANNEL, SHELF AND ALL EXPOSED CONCRETE WITH SHERWIN-WILLIAMS MACROPOXY 646 NSF, MILL WHITE OR APPROVED EQUAL. AT LEAST 2 COATS GIVING A DRY FILM THICKNESS OF 10-14 MILS.

FRANCONIA TOWNSHIP STANDARD DETAIL

DOGHOUSE MANHOLE BASE DETAIL

Metz Engineers

DATE	7–2012	NOT TO SCALE	SN604