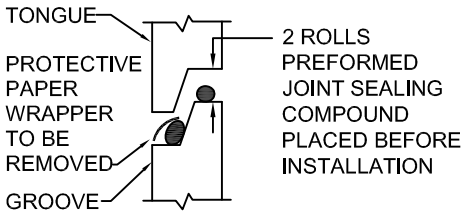

OPEN JOINT

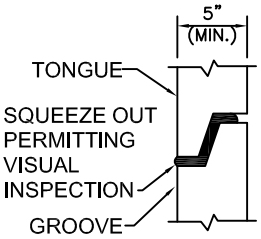

CLOSED JOINT

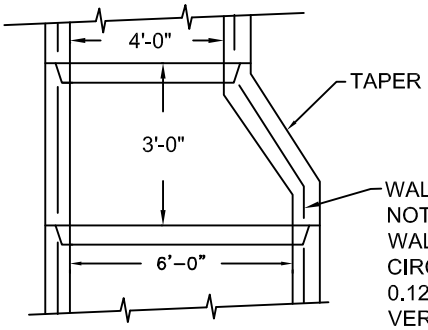

CLOSED JOINT

WALL REINFORCEMENT
NOTE:
WALL REINFORCEMENT
CIRCUMFERENTIAL FULL DEPTH
0.12 in^2 /VERTICAL FT
VERTICAL FULL DEPTH
0.12 in^2 /HORIZONTAL FT
PLACE REINFORCEMENT MESH
CENTRALLY IN WALL.

NOTE:

1) RISER AND CONE SECTIONS TO BE ADEQUATELY REINFORCED IN ACCORDANCE WITH ASTM SPECIFICATION C-478M-90, STANDARD SPECIFICATION FOR PRECAST REINFORCED CONCRETE MANHOLE SECTIONS

FRANCONIA TOWNSHIP STANDARD DETAIL

PRE-CAST MANHOLE JOINTS AND TRANSITION DETAILS

DATE	7–2012	NOT TO SCALE	SN602

Metz Engineers