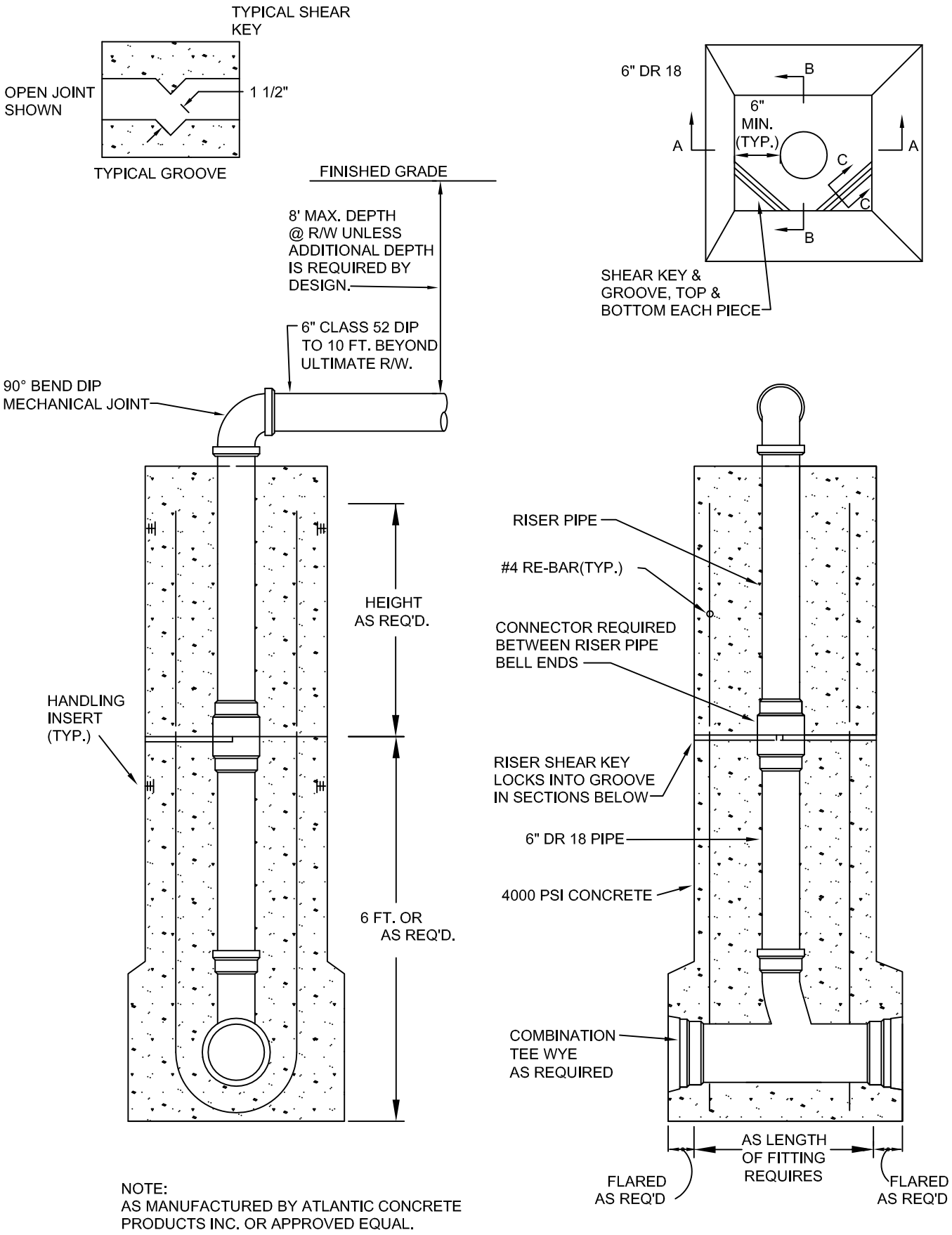

NOTE:
AS MANUFACTURED BY ATLANTIC CONCRETE PRODUCTS INC. OR APPROVED EQUAL.

FRANCONIA TOWNSHIP STANDARD DETAIL

PRECAST FOR DEEP CUT LATERAL CONNECTION

DATE	7–2012	NOT TO SCALE	SN614

Metz Engineers