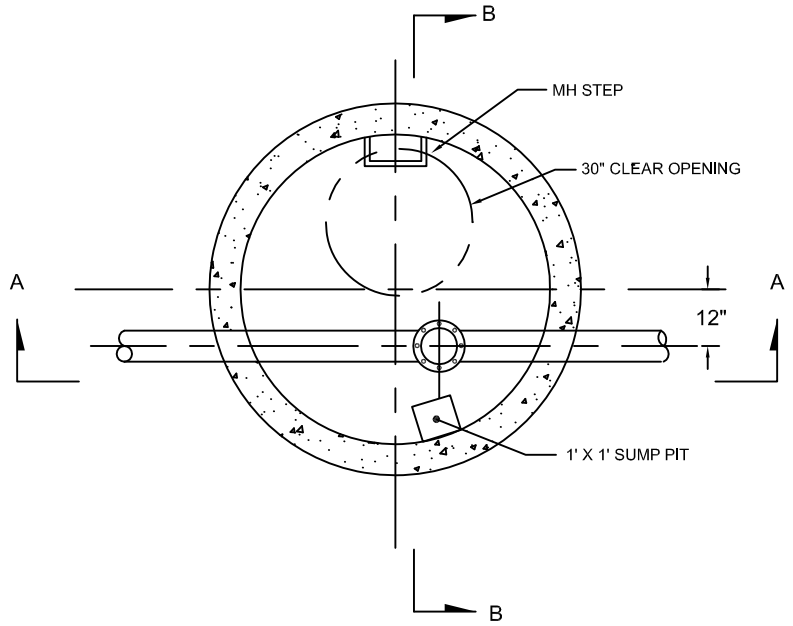

PLAN SECTION

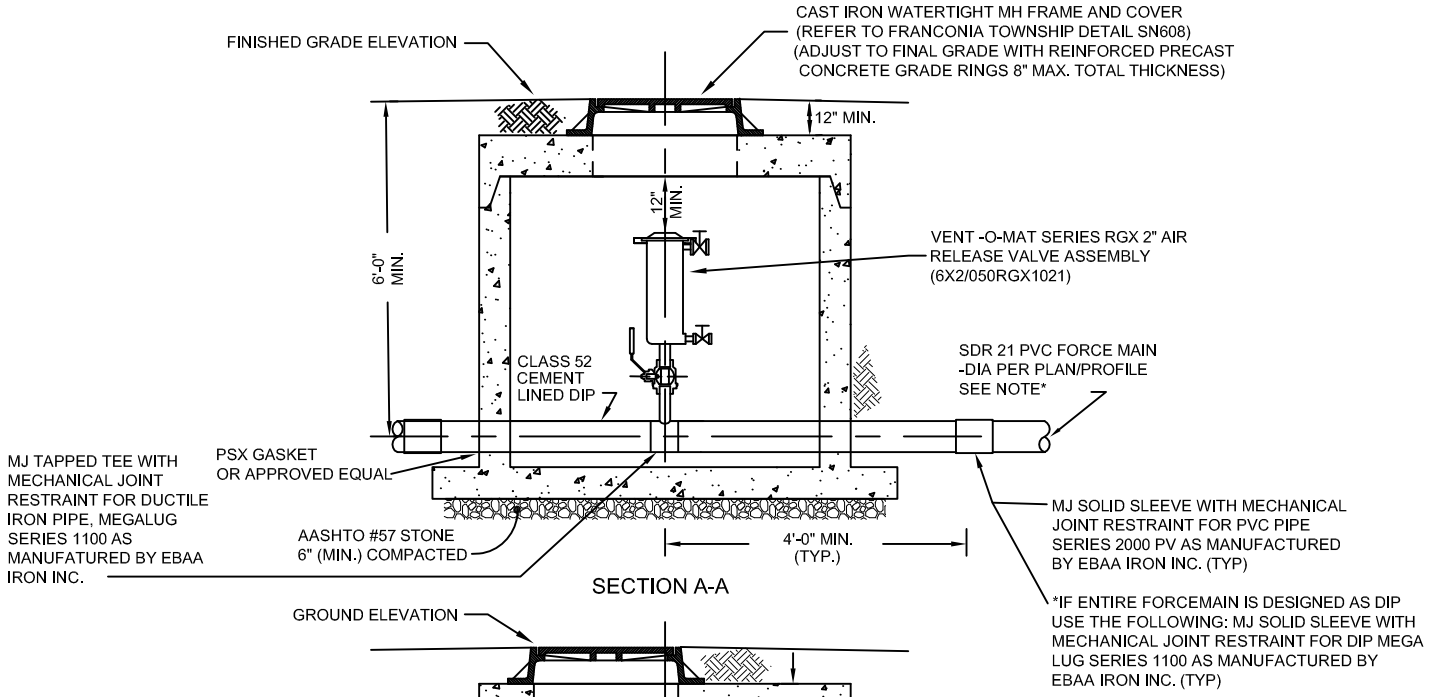

SECTION A-A

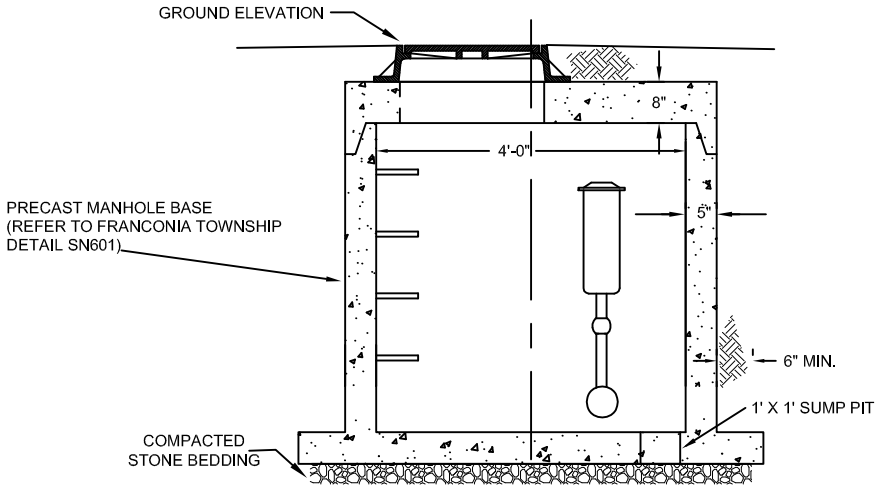

SECTION B-B

FRANCONIA TOWNSHIP STANDARD DETAIL

IN-LINE AIR VALVE CHAMBER FOR 3"-6" FORCEMAIN

Metz Engineers

DATE	7–2012	NOT TO SCALE	SN625