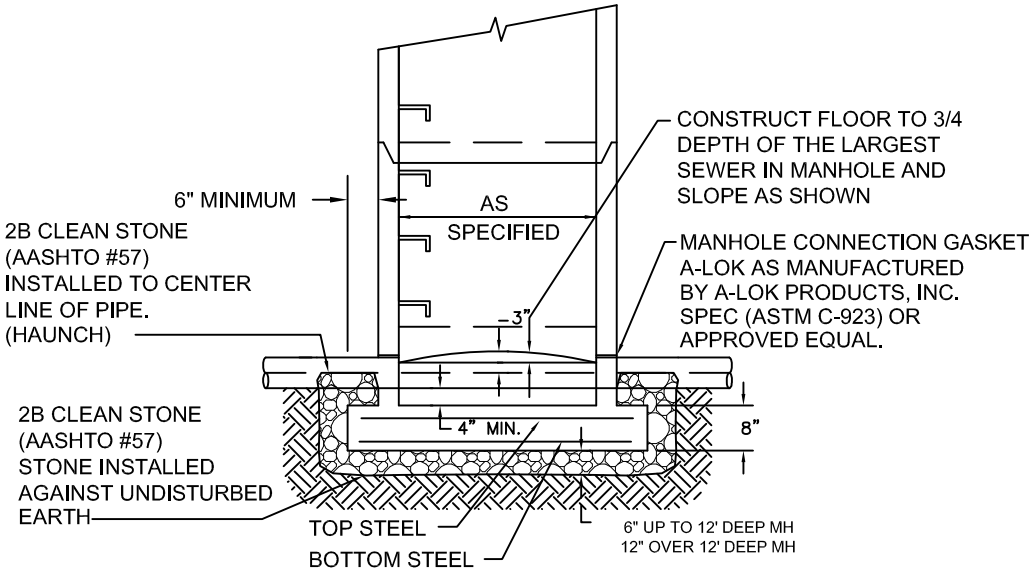

PRECAST MANHOLE HEIGHT	TOP STEEL REQUIREMENTS	BOTTOM STEEL REQUIREMENTS
0'-0" TO 30'-0"	NO. 4 BARS AT 6" C TO C OR 0.33 in^2 /FT WWF 6" MAXIMUM SPACING	NO. 4 BARS AT 12" C TO C OR 0.16 in^2 /FT WWF 6" MAXIMUM SPACING
>30'-0" TO 60'-0"	NO. 5 BARS AT 6" C TO C OR 0.56 in^2 /FT WWF 6" MAXIMUM SPACING	NO. 4 BARS AT 6" C TO C OR 0.27 in^2 /FT WWF 6" MAXIMUM SPACING

NOTES:

1) CONSTRUCT IN ACCORDANCE WITH PENNDOT PUBLICATION 408 CURRENT EDITION SECTION 714, ASTM C-478M-90 STANDARD SPECIFICATION FOR PRECAST REINFORCED CONCRETE MANHOLE SECTIONS AND PENNDOT RC STANDARDS CURRENT EDITION.
2) MINIMUM STRENGTH OF CONCRETE
   CAST-IN-PLACE 4000 PSI(MIN.)
   PRECAST 4000 PSI(MIN.)
3) PROVIDE STEEL REINFORCEMENT MEETING THE REQUIREMENTS OF PENNDOT PUBLICATION 408 CURRENT EDITION SEC. 709. REINFORCE PER PENNDOT 408 CURRENT EDITION AND RC STANDARD RC-39M SHEETS 1 THROUGH 5.

FRANCONIA TOWNSHIP STANDARD DETAIL

PRECAST MANHOLE BASE

DATE	7–2012	NOT TO SCALE	SN601

Metz Engineers

SN601.DWG