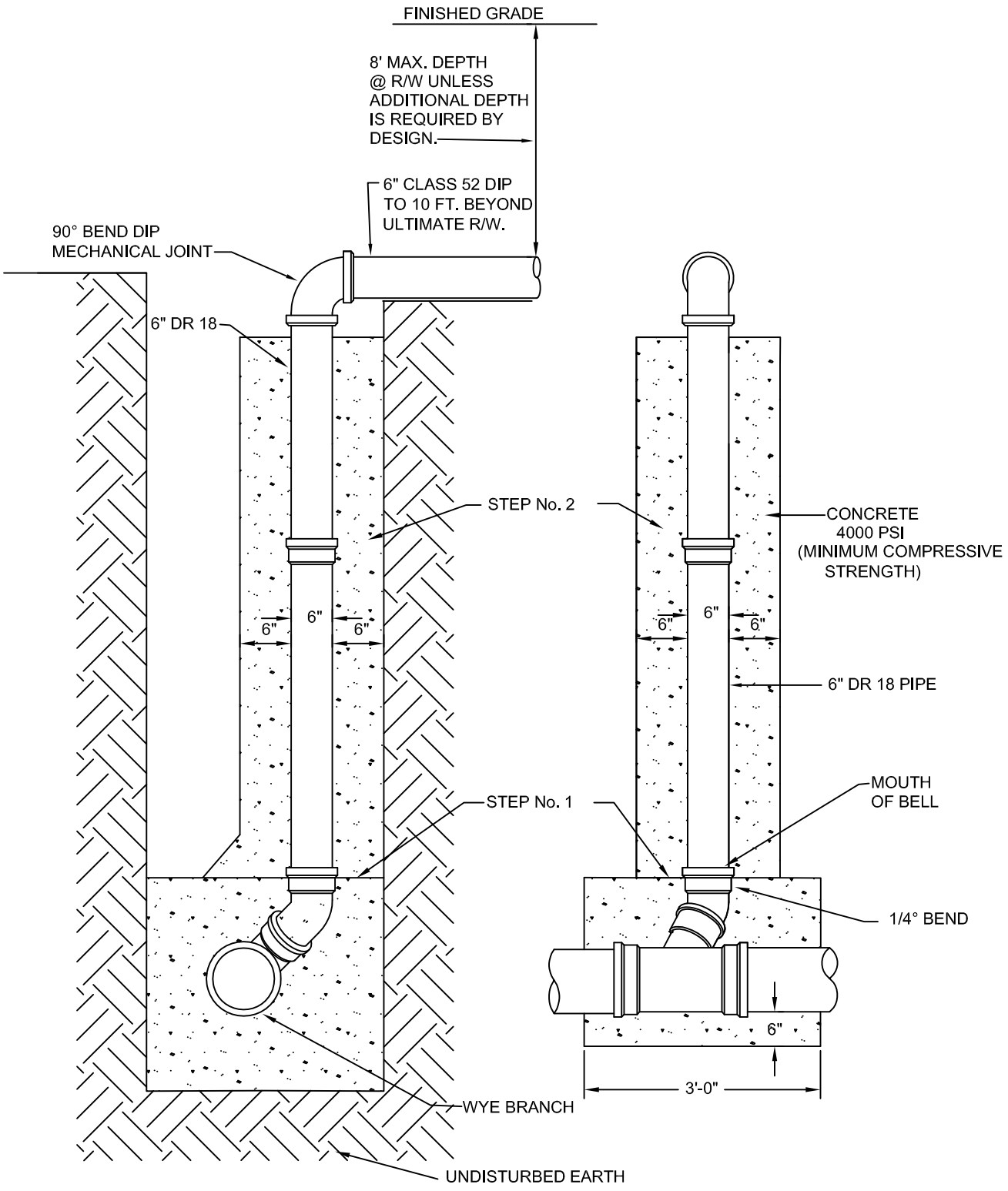

METHOD OF CONSTRUCTION

ONCE WYE HAS BEEN INSTALLED, INSERT 6" 45° BEND. AND POUR CONCRETE TO 1" BELOW MOUTH OF BELL PERMIT CONCRETE TO SET UP FOR A PERIOD OF 24 HOURS BEFORE INSERTION OF RISER PIPE, AND CONCRETE ENCASEMENT.

FRANCONIA TOWNSHIP STANDARD DETAIL

DEEP CUT LATERAL

DATE	7–2012	NOT TO SCALE	SN615

Metz Engineers