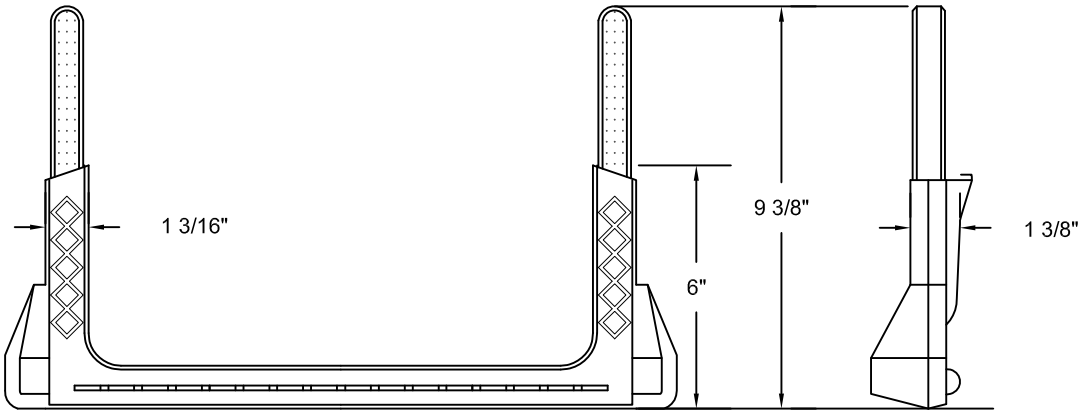

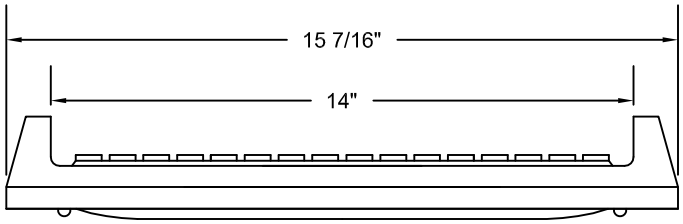

COPOLMER POLYPROPYLENE PLASTIC
STEP PS 2-B

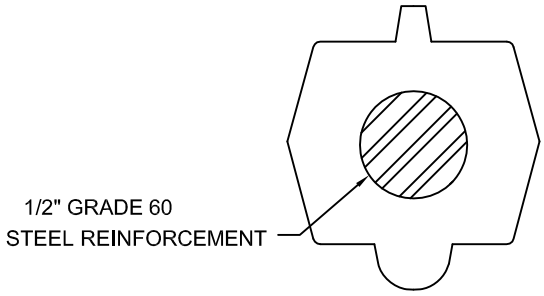

COPOLYMER POLYPROPYLENE MANHOLE STEP (ASTM C-478)

PLASTIC

MANHOLE STEPS ARE TO BE MADE OF COPOLYMER POLYPROPYLENE.

THE COPOLYMER POLYPROPYLENE TO CONFORM TO A.S.T.M. D-4141-95B PPO344B33534Z02
(THE PREVIOUS STANDARD OF A.S.T.M. D-4101-92B, WAS REPLACED BY D-4101-95B.

STEEL REINFORCING BAR

THE STEEL TO BE USED IN MANUFACTURING OF THIS PRODUCT TO BE A DEFORMED 1/2" REINFORCING ROD.
THIS MATERIAL TO BE GRADE 60 AND CONFORM TO ALL THE REQUIREMENTS OF ASTM A-615.

FRANCONIA TOWNSHIP STANDARD DETAIL

COPOLYMER POLYPROPYLENE MANHOLE STEP

DATE	7–2012	NOT TO SCALE	SN617

Metz Engineers