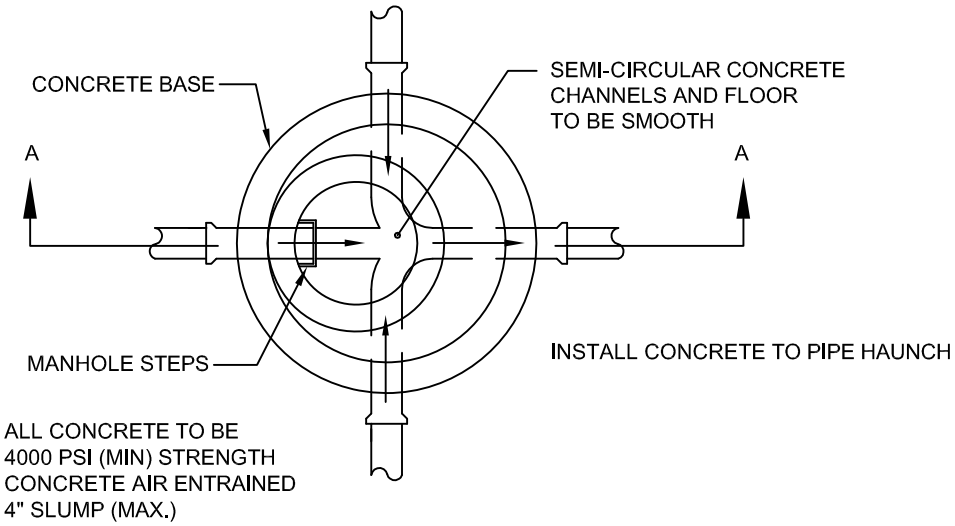

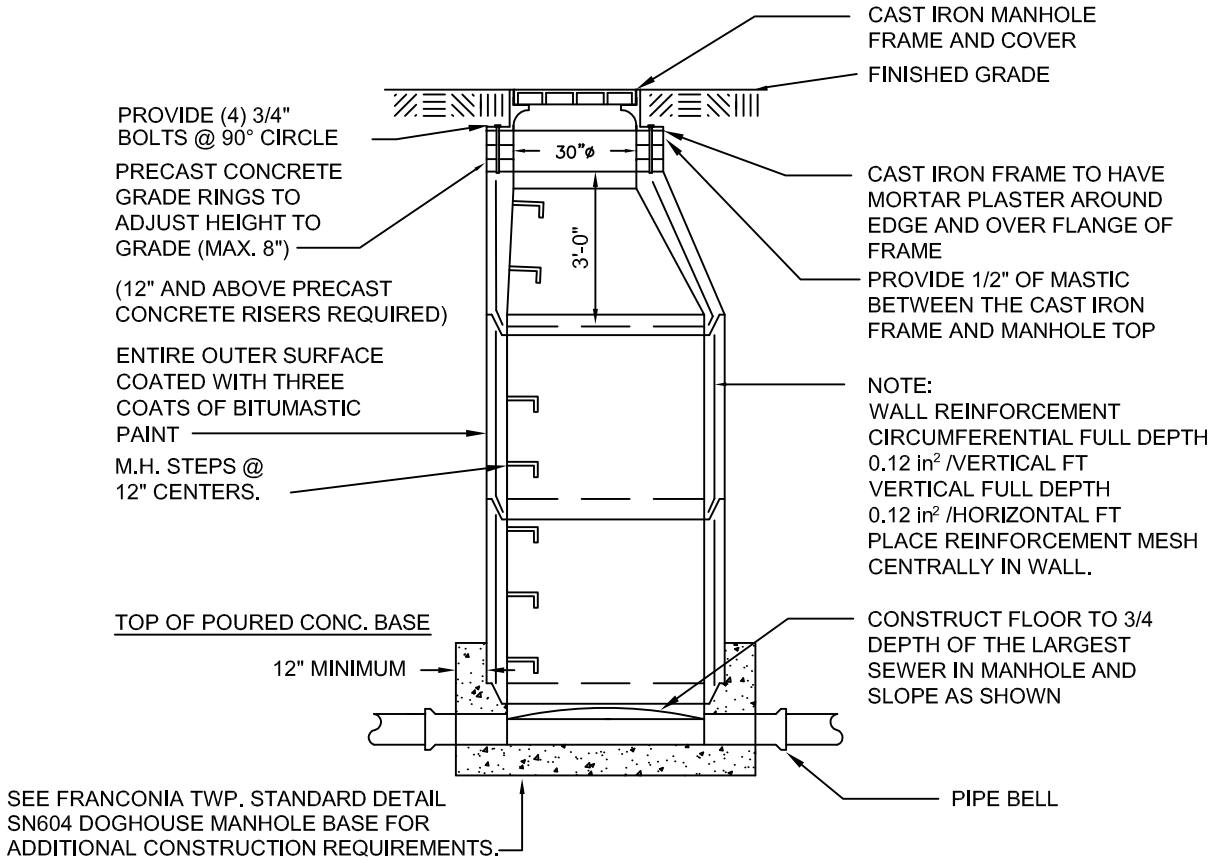

NOTE:
1. STEEL TEMPLATE TO BE SUPPLIED BY MANHOLE MFR. IN ORDER TO FORM PROPER RECESS IN CONCRETE.
2. RISER TO BE MULTIPLE LENGTHS OF 1'-0", IN ORDER TO SUIT VARIATIONS IN ELEVATION.

FRANCONIA TOWNSHIP STANDARD DETAIL

PRECAST MANHOLE WITH POURED CONCRETE BASE

Metz Engineers

DATE	7–2012	NOT TO SCALE	SN603