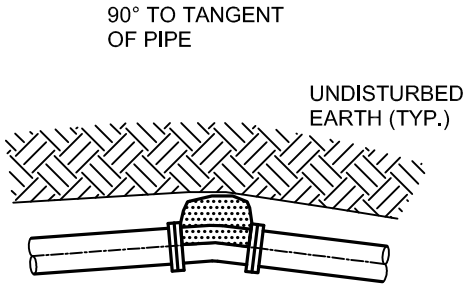

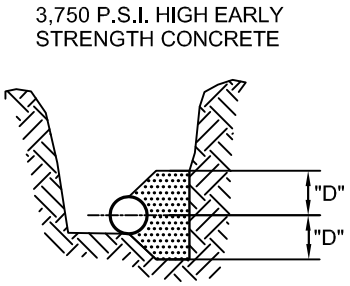

HORIZONTAL BENDS

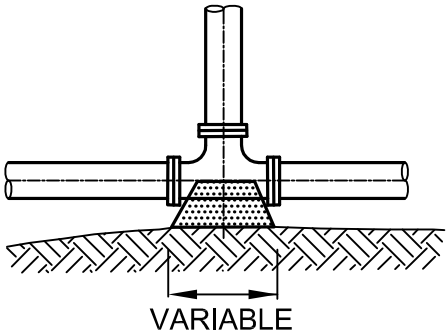

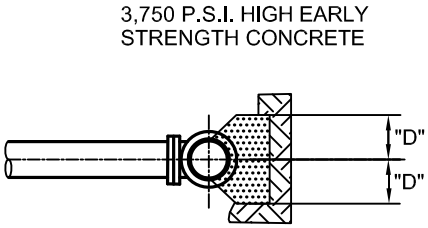

HORIZONTAL TEES

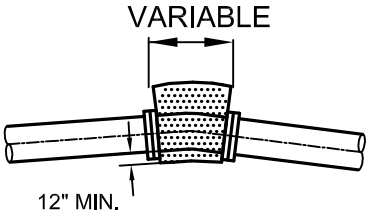

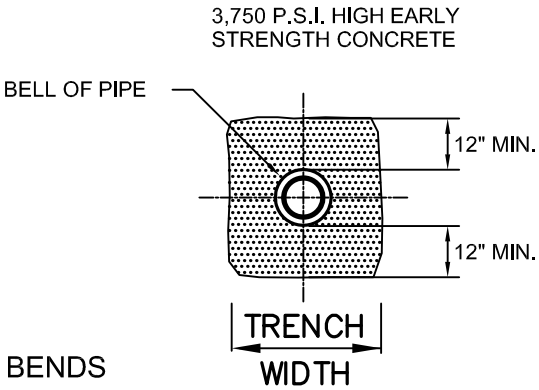

VERTICAL BENDS

NOTES:

1. THRUST BLOCKS MUST BEAR AGAINST UNDISTURBED EARTH.
2. SIZE OF THRUST BLOCKS TO BE DETERMINED INDIVIDUALLY AT TIME OF CONSTRUCTION.
3. HARNESS OR RESTRAIN PIPE IF ORDERED.
4. "D" IS EQUAL TO DIAMETER OF PIPE.

FRANCONIA TOWNSHIP STANDARD DETAIL

TYPICAL THRUST BLOCKS

Metz Engineers

DATE	7–2012	NOT TO SCALE	SN620