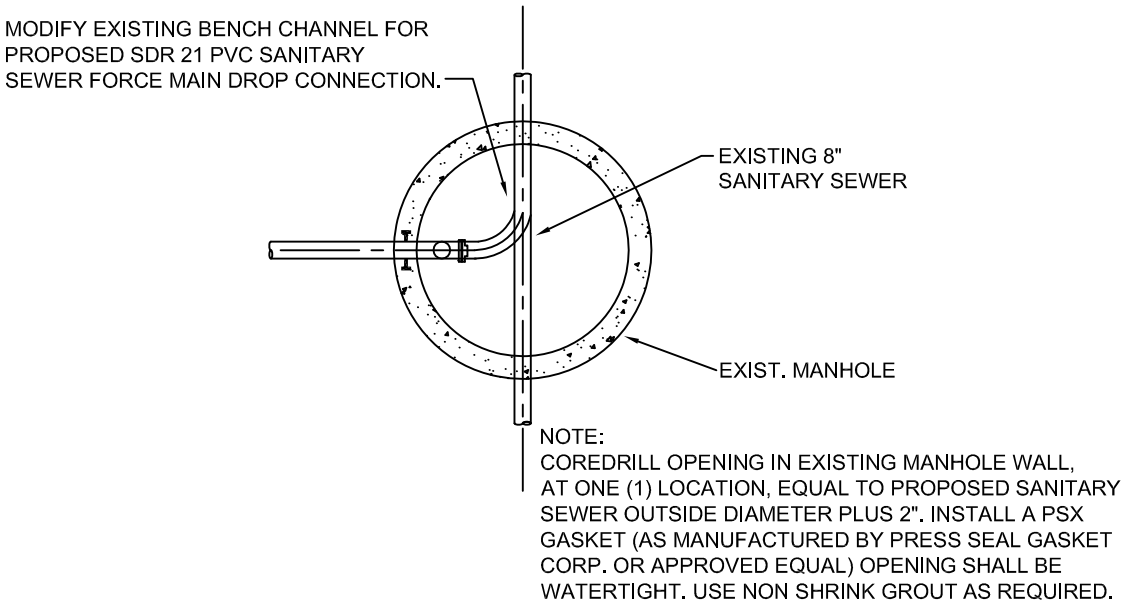

SECTION A–A

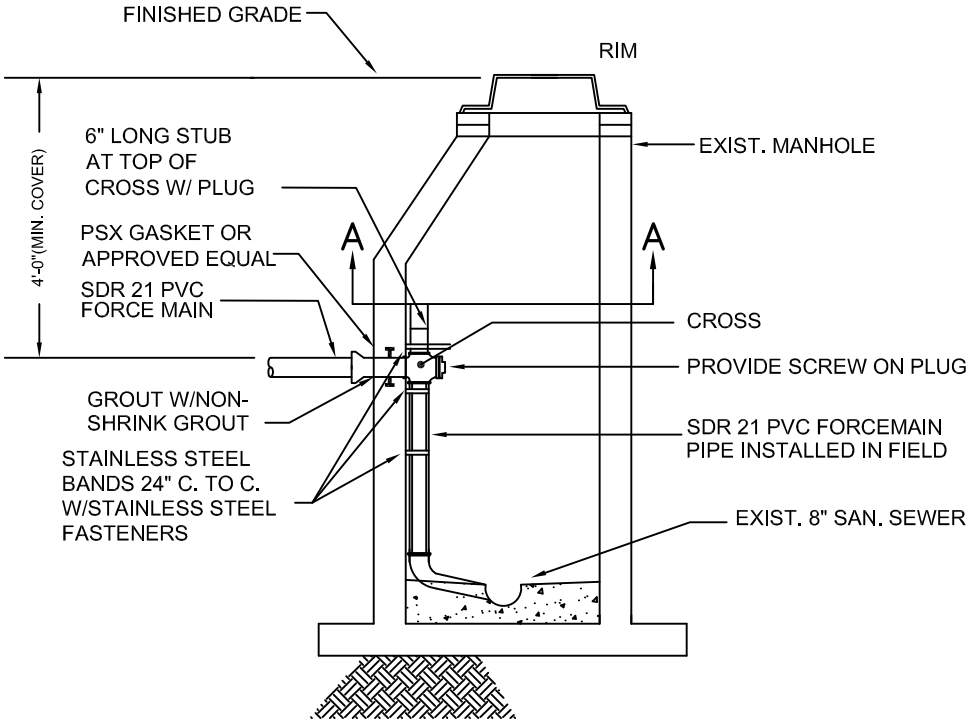

FRANCONIA TOWNSHIP STANDARD DETAIL

FORCE MAIN CONNECTION TO EXISTING SANITARY SEWER (PROPOSED INSIDE DROP)

Metz Engineers

DATE	7–2012	NOT TO SCALE	SN619