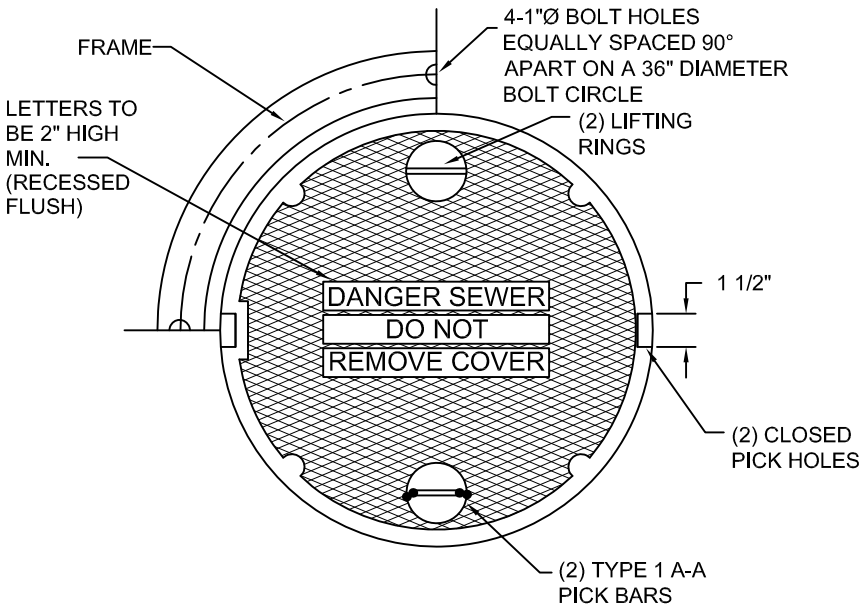

PLAN

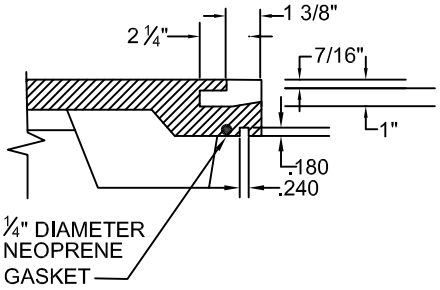

PICKHOLE & GASKET

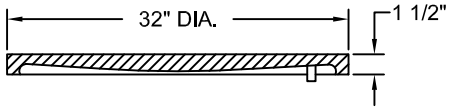

COVER SECTION

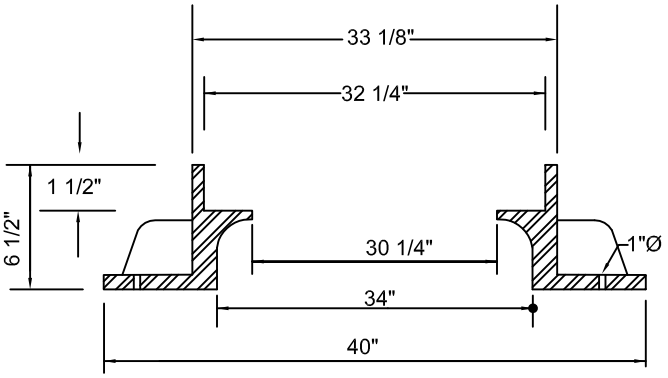

SECTION

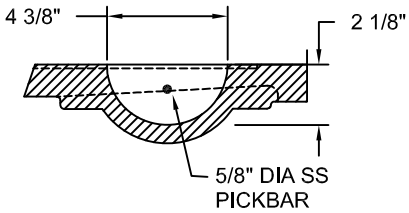

STATIONARY MANHOLE

PICKBAR DETAIL

APPROXIMATE WEIGHT 375 LBS.

NOTES

1. PROVIDE MANHOLE FRAMES AND COVERS MEETING THE REQUIREMENTS OF PENNDOT PUBLICATION 408, CURRENT EDITION, SECTION 605.2(b). AND AS MODIFIED HEREIN: DESIGN MANHOLE FRAME, COVER AND GRADE ADJUSTMENT RINGS FOR PHL 93 (HS25) LIVE LOAD.
2. PROVIDE MANHOLE FRAMES AND COVERS SUPPLIED BY EAST JORDAN IRON WORKS (FRAME 1322 Z, COVER 1480 AGS WITH GASKET) OR APPROVED EQUAL.
3. ALL FRAMES TO BE BOLTED DOWN.
4. ALL COVERS REQUIRED TO BE GASKETED.
5. ALL MANHOLES SHALL BE EQUIPPED WITH A WATER TIGHT INSERT (DISH) "NO FLOW" AS MANUFACTURED BY SEALING SYSTEMS INC. OR APPROVED EQUAL.
6. COAT STRUCTURAL STEEL AND CAST IRON FRAMES AND COVERS WITH BITUMINOUS PAINT. AS AN ALTERNATIVE TO BITUMINOUS PAINT, HOT DIP GALVANIZE STRUCTURAL STEEL FRAMES AND COVERS IN ACCORDANCE WITH PENNDOT PUB. 408 SECTION 1105.02(S) CURRENT EDITION.

FRANCONIA TOWNSHIP STANDARD DETAIL

30" CAST IRON MANHOLE FRAME AND COVER

DATE	7–2012	NOT TO SCALE	SN607

Metz Engineers